Typical HVAC Communications Network for XC-SSA32/CLK Network Controller

Total of 32 thermostats on one (1) XCI Serial-Stat Controller

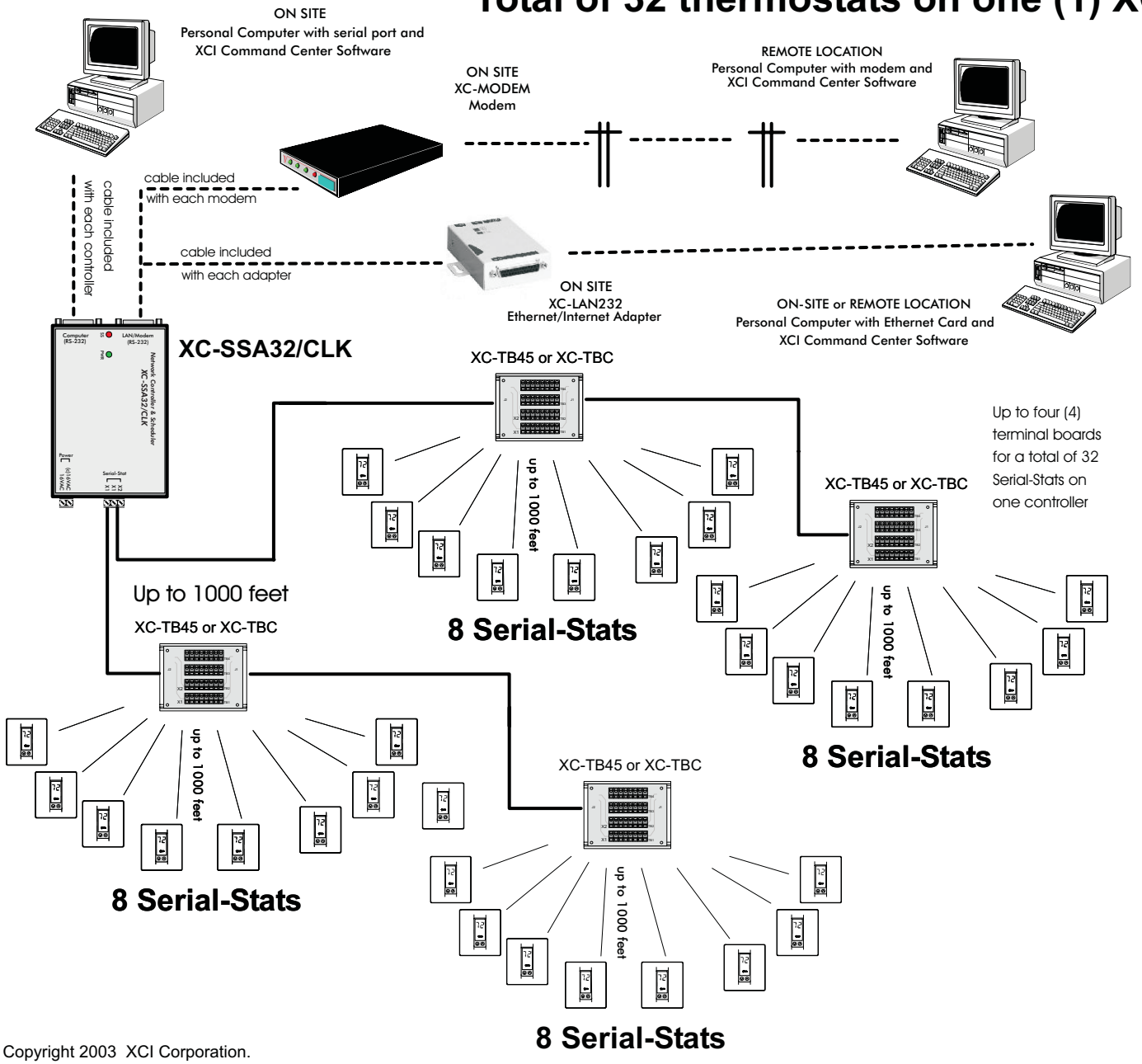

Cable and Wiring Notes
All XCI products follow industry standard data communications wiring practices. Refer to your local building codes for specific requirements

Wiring Guidelines
A) Any Serial-Stat can be up to 1,000 feet away from the Network Controller
B) Total of 4,000 feet of cable on any one controller (2,000 feet on each Serial-Stat comm circuit (X1-X2)
C) ANY combination of home-run, daisy-chain, or multi-drop wiring configuration may be used
D) XC-TBC or XC-TB45 terminal boards may be placed anywhere within the 4,000 feet

Cable Specifications
Serial-Stat cable options:
A) Category 5, 24AWG, 4-pair, or equivalent
B) Category 5, 24AWG, 4-pair, plenum rated or equivalent

Pair 1 - Serial-Stat Communications Bus
X2 - Blue with White Stripe
X1 - White with Blue Stripe
Pair 2 - (Option) Contact Closure Setback
CLK2 - Orange with White Stripe
CLK1 - White with Orange Stripe
Pair 3 - (Option) Remote Power
24VAC (common) - Green with White Stripe
24VAC - White with Green Stripe
Pair 4 - (Option) Spare Pair
Spare - Brown with White Stripe
Spare - White with Brown Stripe

Copyright 2003 XCI Corporation.

P/N 200069-001

Serial-Stat Wiring Options

Multi-Drop Configuration

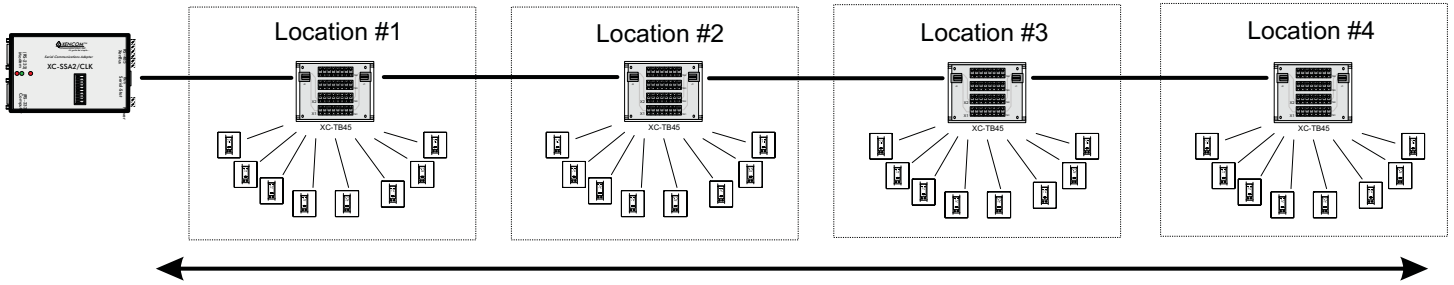

Any Serial-Stat up to 1000 feet away from adapter. 3000 feet total wire.

Home Run Configuration

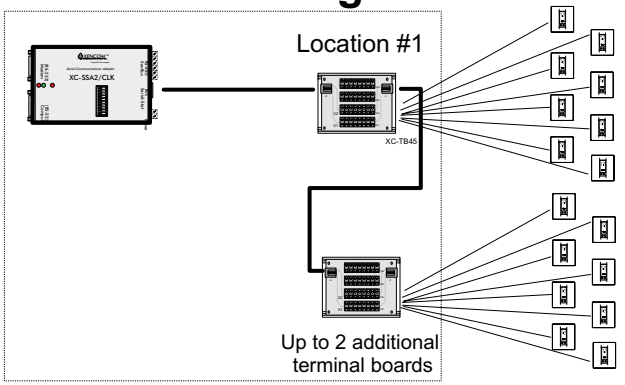

Any Serial-Stat up to 1000 feet away from adapter. 3000 feet total wire.

Daisy Chain Configuration

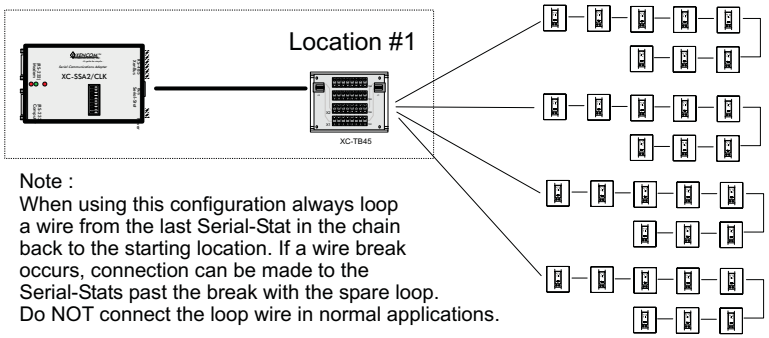

Note :
When using this configuration always loop a wire from the last Serial-Stat in the chain back to the starting location. If a wire break occurs, connection can be made to the Serial-Stats past the break with the spare loop. Do NOT connect the loop wire in normal applications.

NOTE: All distances calculations are made using Category 5 communications cable. Significant distance reductions may occur if using other cable.

Any Serial-Stat up to 1000 feet away from adapter. 3000 feet total wire.

Mixed Configuration

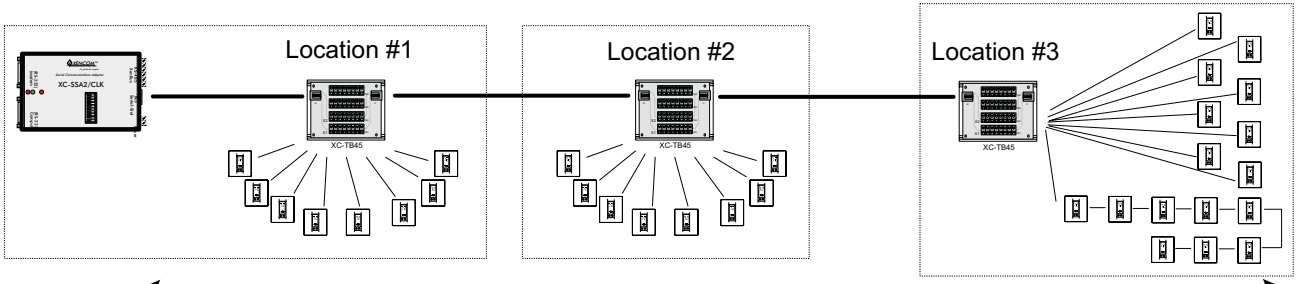

Any Serial-Stat up to 1000 feet away from adapter. 3000 feet total wire.

Copyright 1997-2002 XCI Corporation

P/N 200006-003